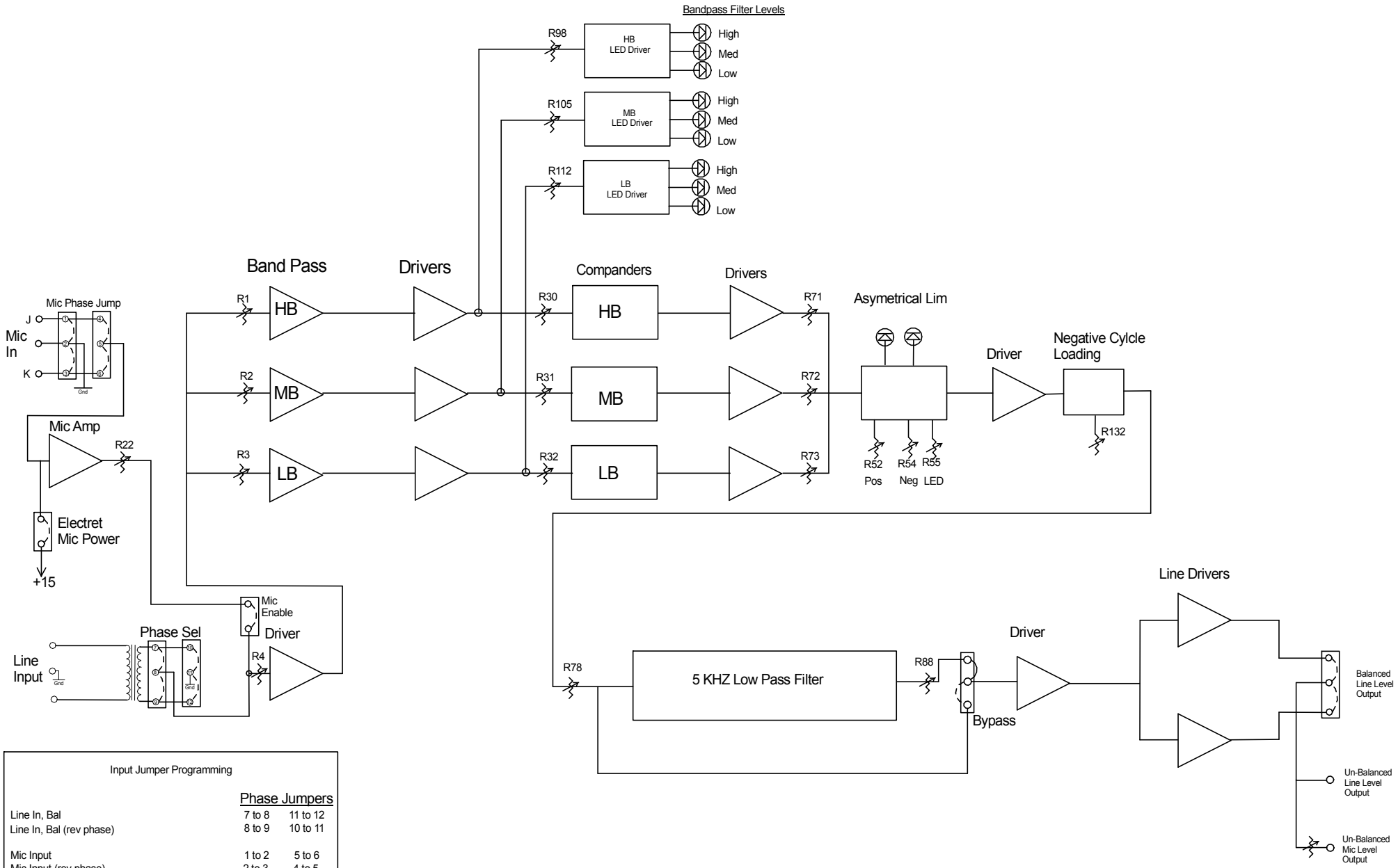

Input Jumper Programming

	Phase Jumpers	
Line In, Bal	7 to 8	11 to 12
Line In, Bal (rev phase)	8 to 9	10 to 11
Mic Input	1 to 2	5 to 6
Mic Input (rev phase)	2 to 3	4 to 5

K7ODQ Limiter

by: K7EMF